WMS
Wall Mount with Junction Box

	WMS
Appearance	Hikvision white
Range of Application	Suitable for various pendant caps
Material	Aluminum alloy
Dimension	120 mm x 121 mm x 200 mm (4.72" x 4.76" 7.87")
Weight	1044 g (2.3 lbs)

NOTES: Pay attention to color matching.

Install bracket on flat wall.

The wall must be capable of supporting over three times as much as the total weight of the camera and the mount.

Maximum load capacity of bracket is 50 kg.

Key Features

- Aluminum Alloy Material with Surface Spray Treatment
- Waterproof

Dimensions

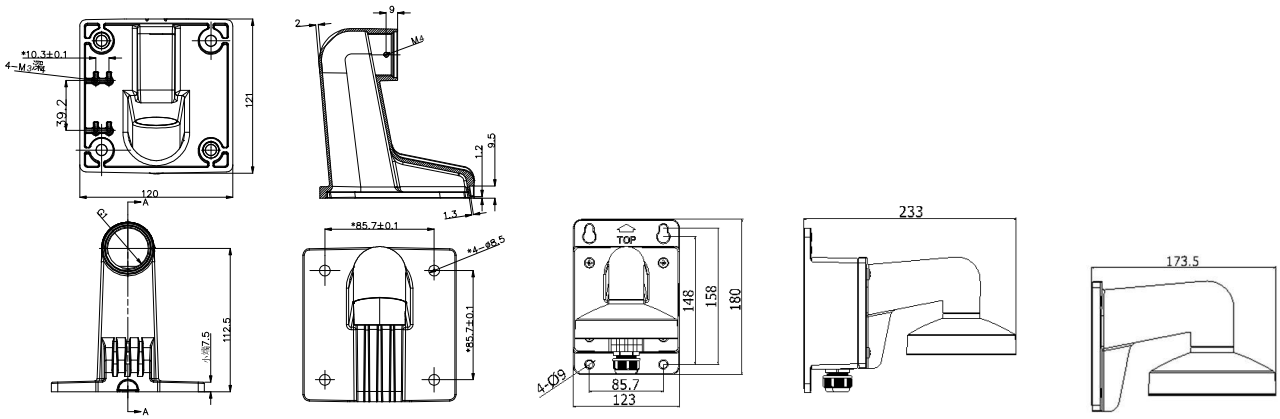

NOTE: The actual bracket may vary from the picture above.

Order Model

WMS

© 2015-2019 Hikvision USA Inc. • All Rights Reserved • Specifications subject to change without notice.
Hikvision USA Inc., 18639 Railroad Street, City of Industry, CA 91748, USA • Hikvision Canada, 4848 rue Levy, St-Laurent, Quebec, Canada, H4R 2P1
Tel: +1-909-895-0400 • Toll Free in USA: +1-866-200-6690 • E-Mail: sales.usa@hikvision.com • www.hikvision.com
Rev. 040919NA