GP120

Mini Dome Gang Plate

Available Models:

The GP120 adapter connects specific mini dome cameras to a gang box.

Specifications

	GP120 Mini Dome Gang Plate
Appearance	Hikvision white
Material	Plastic
Dimension	Φ120 mm (Φ4.72")
Weight	Approximately 33 g (1.16 oz)

Dimensions

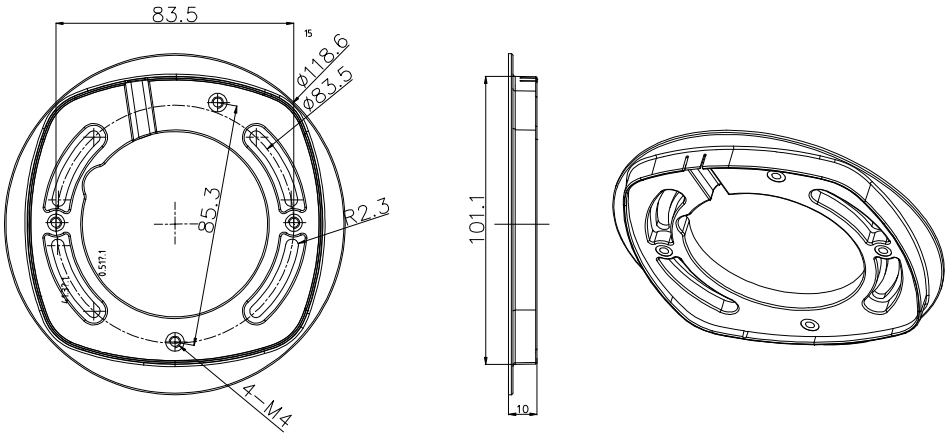

© 2019 Hikvision USA Inc. • All Rights Reserved • Specifications subject to change without notice.
Hikvision USA Inc., 18639 Railroad Street, City of Industry, CA 91748, USA • Hikvision Canada, 4848 rue Levy, St-Laurent, Quebec, Canada, H4R 2P1
Tel: +1-909-895-0400 • Toll Free in USA: +1-866-200-6690 • E-Mail: sales.usa@hikvision.com • www.hikvision.com
Rev. 052819NA